REGULAR MEETING AGENDA

COLUMBIA BOARD OF SELECTMEN

Tuesday, February 3, 2015, 7 pm

Adella G. Urban Administrative Offices Conference Room
323 Route 87, Columbia, CT

CALL TO ORDER

1. PLEDGE OF ALLEGIANCE

2. MINUTES: 1/20/15 Regular Meeting

3. AUDIENCE OF CITIZENS

4. OLD BUSINESS

5. NEW BUSINES
5.1 2014 Grand List

6. COLUMBIA LAKE / DAM / BEACH
6.1 Concrete dock at town beach

7. APPOINTMENTS / RESIGNATIONS

8. TOWN ADMINISTRATOR REPORT

9. CORRESPONDENCE

10. BUDGET
10.1 Transfers
10.2 Refunds

11. APPROVE PAYMENT OF BILLS

12. BOARD MEMBER COMMENTS

13. EXECUTIVE SESSION
13.1 Real estate per State Statutes Section 1-200(6)(D); Pending Litigation per State Statutes Section 1-200(6)(B); Personnel per State Statues Section 1-200(6)(A);

14. ADJOURNMENT

REGULAR MEETING MINUTES
COLUMBIA BOARD OF SELECTMEN
Tuesday, January 20, 2015, 7 pm

Adella G. Urban Administrative Offices Conference Room
323 Route 87, Columbia, CT

Members Present: Deputy Selectman Steven Everett, William O'Brien, Selectman Rob Hellstrom, Selectman Robert Bogue

Members Excused: First Selectman Carmen Vance

Also Present: Interim Town Administrator Mark Paquette, Town Attorney Duncan Forsyth, Finance Director Beverly Ciurylo, Town Planner Paula Stahl, Director of Public Works George Murphy, Facilities Manager Bud Meyers, Recording Secretary Linda McDonald, Ann Dunnack, Nikki Keldsen, Gary Littlefield, Millie Ramsey, William Ross, Keith Herzig, Jocelyn Dunnack, John Schroder, and others

CALL TO ORDER: S. Everett called the meeting to order at 7:00 pm.

1. **PLEDGE OF ALLEGIANCE:** The Pledge of Allegiance was recited.
2. **MINUTES:** 1/6/2015 Regular Meeting: R. Bogue MOVED to approve the regular meeting minutes of 1/6/2015 as presented. MOTION CARRIED 4:0:0.

3. **AUDIENCE OF CITIZENS:** No audience of citizens.
4. **OLD BUSINESS**

4.1 Request from Walter Tabor to acquire town property:

P. Stahl distributed a map of the property and presented background information for this property. There are grassland easements on the property. The property would be used for agricultural purposes (blueberry farm) as per email from W. Tabor. P. Stahl explained the options of the town to sell or grant a license.

W. Tabor explained the limitations put on the easements. He said he has plans to bring in utilities from Roberts Drive. He said there was an ancient right-of-way that pre-dates the road and town access of the land to allow agricultural access.

W. Tabor explained that the use of the land has been hay production with limited vehicular use. He plans to build two barns for hay storage on the parcel.

S. Everett suggested that there could be opposition from neighbors. W. Tabor said the easiest option for him is to get a driveway permit and put a driveway in.

R. Hellstrom stated for the record that he does work for W. Tabor and will be recusing himself from any vote on this matter. He said W. Tabor wishes to purchase a right-of-way to put in a farm and would hope the Board could find a way to make this happen.

S. Everett MOVED to AUTHORIZE the Town Administrator and Town Planner to work with Mr. Tabor to bring a resolution to the BOS next meeting. MOTION CARRIED 3:0:1 with R. Hellstrom abstaining.

5. NEW BUSINESS

5.1 2014 Audit: B. Ciurylo reported that the audit went well and the town ended with a positive balance for the year.

6. COLUMBIA LAKE / DAM / BEACH:

6.1 **Concrete dock at town beach:**

A. Dunnack, speaking as Chair of the Columbia Recreation Commission (CRC), said she as appointed by the last Town Administrator to form an AdHOC committee comprised of members from the CRC and the Lake Management Advisory Committee (LMAC). The charge of the committee was to make a recommendation to the BOS on the replacement of the concrete dock. The committee recommended replacement of the dock to serve the following functions: 1) to separate the boat launch from the swimming area for safety reasons, 2) to somehow mitigate the migration of sand from the beach, and 3) to serve the public for swimming. The committee also recommended that the dock be in the same location, "L" shaped, and a stable, not floating dock preferably constructed of concrete.

Facilities Manager Bud Meyers reported on meetings with a contractor from Earthworks. In order to have a 26' "L" shaped concrete dock, a coffer dam would have to be made. Some options are to come straight out 90' with concrete, extend the 90' feet to add a concrete "L", or to add an "L" floating dock.

Discussion followed on how to fund a dock replacement.

In order to replace the dock, a formal written bid would be needed, the project would have to be approved by FiPAC, the BOS and Inland Wetlands and Watercourses Commission (IWWC) and a town meeting would be required. The project would have to be done during the lake drawdown.

B. Meyers will prepare cost estimates for the next BOS meeting.

7. APPOINTMENTS / RESIGNATIONS:

7.1 **Resignation of Maureen Allen from Commission on Aging (CONA):** R. Bogue MOVED to accept the resignation of Maureen Allen from CONA. MOTION CARRIED 4:0:0.

7.2 **Appointment of Jill Livingston (R) to CONA:** R. Bogue MOVED to APPOINT Jill Livingston to the Commission on Aging. MOTION CARRIED 4:0:0.

8. **TOWN ADMINISTRATOR REPORT:** M. Paquette updated the Board on the employment search for Town Administrator and said interviews are planned for February 18, 2015. He reported on an open space grant, repairs to town bridges, the library renovation, the school roof replacement, Town Clerk's office software, and STEAP grants. M. Paquette informed the Board that the Governor's budget will be released on February 18th.

9. **CORRESPONDENCE:** There was no correspondence.

10. BUDGET

10.1 Transfers: R. Bogue MOVED to APPROVE the following transfer of funds.

AMOUNT	FROM	TO
$ 65.00	10-4112-500, Admin-Gen Supplies	10-4112-750, Admin-Conferences/Seminars
$100.00	10-4330-811, Machine/ Equip<$5000	10-4330-110, Postage
$300.00	10-4330-811, Machine/Equip<$5000	10-4550-300, Printing
$25.40	10-4550-750, Conf/Seminars	10-4550-550, Misc Service Charges

MOTION CARRIED 4:0:0.

10.2 Refunds: R. Bogue MOVED to APPROVE the following refund:

TO	FROM	AMOUNT
Richard & Luisa Lenzi	Town of Columbia	$1,465.02

MOTION CARRIED 4:0:0.

11. **APPROVE PAYMENT OF BILLS:** R. Bogue MOVED to APPROVE payment of regular bills totaling $22,737.10. MOTION CARRIED 4:0:0.

12. **BOARD MEMBER COMMENTS:**

13. **EXECUTIVE SESSION – Real estate pursuant to CT State Statutes Section 1-200(6)(D); Pending Litigation pursuant to CT State Statutes Section 1-200(6)(B); Personnel pursuant to CT State Statues Section 1-200(6)(A):** S. Everett MOVED to enter Executive Session at 8:08 p.m. with Interim Town Administrator M. Paquette, Town Attorney D. Forsyth, and Finance Director B. Ciurylo present. MOTION CARRIED 4:0:0. D. Forsyth left the Executive Session at 8:24 p.m. The Board came out of Executive Session at 8:25 p.m.

S. Everett MOVED to add the following item to the agenda: Consideration and possible vote on resolution of the workers' compensation and CHRO claims of Marlaine Martin. MOTION CARRIED 4:0:0.

S. Everett MOVED that the Town Administrator be authorized to resolve the workers' compensation and CHRO claims of Marlaine Martin. MOTION CARRIED 4:0:0.

S. Everett MOVED to return to Executive Session at 8:27 p.m. with Interim Town Administrator M. Paquette and Finance Director B. Ciurylo present. MOTION CARRIED 4:0:0. The Board came out of Executive Session at 8:34 p.m.

R. Bogue MOVED to add the following item to the agenda: Appointment of George Murphy as Interim Blight Enforcement Officer. MOTION CARRIED 4:0:0.

R. Hellstrom MOVED to APPOINT George Murphy as Interim Blight Enforcement Officer effective immediately. MOTION CARRIED 4:0:0.

14. **ADJOURNMENT:** R. Bogue MOVED to adjourn at 8:36 p.m. MOTION CARRIED 4:0:0.

The next regular meeting of the BOS is scheduled for Tuesday, February 3, 2015.

Respectfully Submitted by Linda H. McDonald

Please see the minutes of subsequent meetings for the approval of these minutes and any corrections hereto.

TOWN OF COLUMBIA

ASSESSOR'S OFFICE
323 Jonathan Trumbull Highway
Columbia, Connecticut 06237

Mary F. Lavallee, CCMA II
(860) 228-9555
(860) 228-2335 Fax
Email: mlavallee@columbiactorg

Mon., Tues., Wed. 8:00 am to 4:00 pm
Thursday 8:00 am to 6:00 pm
Friday 8:00 am to Noon

January 23, 2015

Carmen Vance, First Selectman
Mark Paquette, Administrator
Beverly Ciurylo, Fiscal Manager
Town of Columbia

Enclosed are the final Grand List figures for October 1, 2014. I have also included a chart illustrating the percentage of Residential and Commercial Real Estate, Personal Property and Motor Vehicles comprising the .

A comparison of the 2013 Grand List and the 2014 Grand List is also attached for your information. Finally, an attachment is enclosed of the top ten taxpayers for Real Estate, Personal Property and a combined report.

Sincerely,

Mary F. Lavallee

Mary F. Lavallee, CCMA II
Assessor

TOWN OF COLUMBIA

ASSESSOR'S OFFICE
323 Jonathan Trumbull Highway
Columbia, Connecticut 06237

Mary F. Lavallee, CCMA II
(860) 228-9555
(860) 228-2335 Fax
Email:mlavallee@columbiactorg

Mon., Tues., Wed. 8:00 am to 4:00 pm
Thursday 8:00 am to 6:00 pm
Friday 8:00 am to Noon

GRAND LIST OF 2014

REALTY	$ 405,598,261
PERSONAL PROPERTY	$ 13,821,823
MOTOR VEHICLES	$ 44,147,008
(Prior to Elderly and Board of Assessment Appeals)	$ 463,567,092
ELDERLY	
Freeze	0
Circuit Breaker	$ 8,102,560
	$ 471,669,652
WOODLAND (10 MILLS)	$ 1,530
2014 NET GRAND LIST	$ 471,671,182
2013 NET GRAND LIST	$ 466,381,116
INCREASE IN ASSESSED VALUE	$5,290,066
PERCENTAGE INCREASE	1.13%

Mary F. Lavallee, CCMA II
Assessor 1/21/2014

		Motor Vehicles		
	Number	Gross		Net
Grand List	Accounts	Asmt	Exemptions	Asmt
2014	6403	$44,635,358	$488,350	$44,147,008
2013	6294	$42,976,960	$224,830	$42,752,130
Difference	109	$1,658,398	$263,520	$1,394,878
Percent Change	1.70%	3.72%	53.96%	3.16%
		Personal Property		
	Number	Gross		Net
Grand List	Accounts	Asmt	Exemptions	Asmt
2014	413	$16,146,103	$2,324,280	$13,821,823
2013	485	$13,700,880	$1,982,210	$11,718,670
Difference	-72	$2,445,223	$342,070	$2,103,153
Percent Change	-14.85%	17.85%	17.26%	17.95%
		Real Estate		
	Number	Gross		Net
Grand List	Accounts	Asmt	Exemptions	Asmt
2014	2619	$443,508,091	$29,805,740	$413,702,351
2013	2608	$441,628,916	$29,718,600	$411,910,316
Difference	11	$1,879,175	$87,140	$1,792,035
Percent Change	0.42%	0.43%	0.29%	0.44%
Net GL 2014	$471,671,182			
Net GL 2013	$466,381,116			
Total Asmt Increase	$5,290,066			
Motor Vehicle	$1,394,878			
Personal Property	$2,103,153			
Real Estate	$1,792,035			
Total	$5,290,066			
Total Net Increase	$5,290,066			
Percent Increase	1.13%			

GROSS TOP 10 TAXPAYER ACCOUNTS FOR TOWN OF COLUMBIA LEVY YEAR : 2014 DATE : 01/23/2015 DISTRICT : TO PAGE : 1

NAME	ASSESSMENT	# ACCOUNTS
REAL ESTATE		
'ELIDES MICHAEL J & SUSAN H	3,365,500	2
LLC	2,412,500	3
TOURGATE REALTY INC	1,456,800	2
COMMERCE DRIVE LLC	1,214,430	1
KASICA GENE	1,168,560	5
OSWA LLC	1,132,700	3
ENGLERT ALICE M TRUSTEE	1,033,400	4
WILE ANDREW S	982,500	5
CORNERSTONE OF COLUMBIA LLC	928,700	2
MCGUIGAN AUSTIN J & JOAN A	795,200	2
	14,490,290	29
PERSONAL PROPERTY		
CONNECTICUT LIGHT AND POWER CO	8,364,955	1
COLUMBIA MANUFACTURING INC	1,487,500	1
ALGONQUIN GAS TRANSMISSION CO	778,270	1
HAWK INTEGRATED PLASTICS LLC	555,800	1
COLUMBIA FORD INC	492,637	1
JOHNS SCRAP METAL REMOVAL	375,100	1
F B MANION & SONS INC	217,770	1
CELLCO PARTNERSHIP	203,770	2
U-HAUL CO OF CONNECTICUT INC	166,040	1
AT&T MOBILITY LLC	165,890	1
	12,807,732	11
MOTOR VEHICLE		
NISSAN INFINITI LT	401,940	31
TOYOTA LEASE TRUST	387,700	21
SCHATZ TRANSPORT INC	334,760	20
HYUNDAI LEASE TITLING TR	224,570	17
VAULT TRUST	214,820	11
HONDA LEASE TRUST	183,650	12
'ND J BUS INC	178,940	8
MORGAN CHASE BANK NA	137,070	8
CAB EAST LLC	134,030	7
FINANCIAL SER VEH TRUST	125,650	5
	2,323,130	140

GRAND LIST 10/1/14

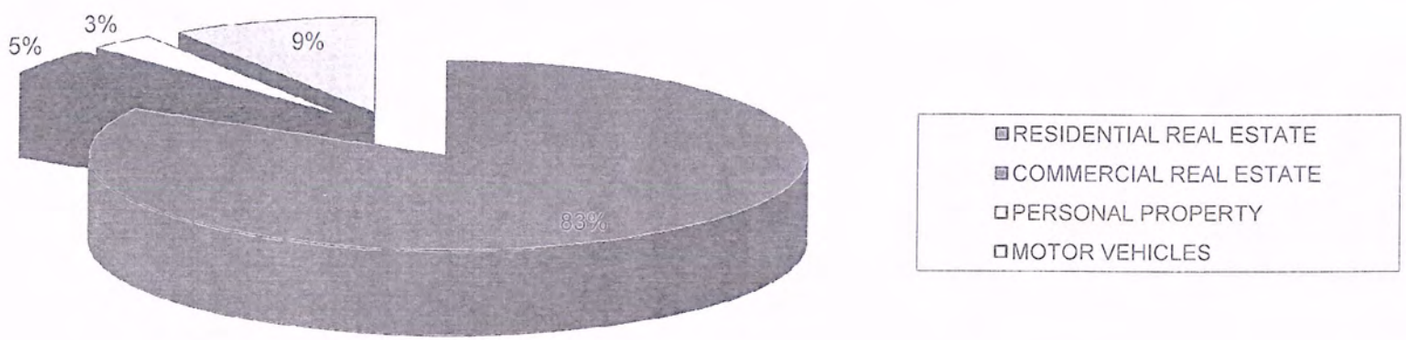

Jacobson

RECEIVED FEB 03 2015

February 2, 2015

Mr. George Murphy
Director of Public Works
Town of Columbia
323 Route 87
Columbia, CT 06237

Re: Murphy House Pier and Beach Erosion
Columbia Lake Beach
NLJ #1043-0012

Dear Mr. Murphy:

As requested, we are providing comments and recommendations regarding the ongoing erosion at the Columbia Lake Beach and a proposal to replace the existing dock the with a new continuous dock constructed of solid concrete block to below ground level of the lake. We understand that the question at hand is, will the construction of a new concrete dock with continuous solid foundation help to mitigate the ongoing problem of beach erosion, and also what other measures can be taken to address the erosion problem.

The issue of beach erosion is something we had previously reviewed with you in 2012. At that time you explained your historical knowledge and experience of having to bring in additional sand on an annual basis when the lake is drawn down. In addition, we visited the site and reviewed available mapping and aerial photographs. Since that time, we are aware that the pre-existing concrete dock on supports has been removed. Based on our recent discussions with you, we understand that it is now proposed to replace this dock with a continuous solid foundation concrete dock extending from the shore about 80 feet, and also possibly extending a floating dock from the end of the concrete dock, then heading to the east (parallel to the shore) some distance.

It appears to us that the beach erosion is caused by a number of factors. First, the slope of the sand area of the beach is exceedingly steep to maintain a stable beach. Research indicates that the ideal slope for a sand shore beach is 1:20 (one vertical to twenty horizontal) to 1:30. Based on available topography, the slope of the Columbia Lake beach now appears to be in some areas as steep as 1:7.5. Additionally, you have indicated that the depth of sand is not very deep, perhaps only 6 to 8 inches. This shallow depth to subsoil will limit the infiltrative capacity of the soil profile. The combination of the steep grade of the beach surface and shallow depth to subsoil means that rainfall on the sand will more quickly run-off towards the water rather than infiltrating through the sand; and in doing so will carry sand to the water surface. This is observable where there is rilling or channel erosion in the sand towards the water surface.

The other significant factor contributing to the sand movement along the beach is the action of waves and water current from the lake on the shore. You have indicated that the prevailing current in the lake is generally from west to east. This apparently wind driven current is supported by some

of the aerial images we reviewed which appear to show the rope buoys in the lake that delineate the swimming area actually bowed towards the east, presumably from wind coming out of the west or northwest. The combination of this prevailing current and wave action from boats will impact the sand at the shore. This action is caused by an effect called longshore current. The longshore current not only moves water in the "surf zone", it also moves sediment parallel to the shoreline. As waves approach the shore at an angle (in this case from the west), sand grains are transmitted onto the shore in the direction of the waves. However when the water retreats, due to gravity, it goes straight back perpendicular to the shoreline contours and not back in the opposite direction from which it came. Since grains are redeposited as the water retreats, the grains are actually deposited farther down the beach. This process, which is referred to as beach drift, results in the net movement of sand at the shoreline parallel to the beach in the direction of the current (in this case to the east).

The displacement and depletion of sand from the beach can therefore likely be attributed to the combination of surface erosion from the beach and the movement of sand at the shoreline due to the water current and waves from the lake.

When we previously reviewed these erosion concerns with you in 2012, we had prepared a conceptual grading plan which incorporated a 2 to 3 foot high retaining wall at the upper reaches of the beach just below the existing paved walk. This would allow the lowering of the elevation at the base of that wall and moderating the slope to the water. Under this scenario, the grade of the beach would be reduced from about 1:7.5 to about 1:15. While not meeting the desired grade cited above of 1:20, it would significantly lessen the slope to the water and likely reduce the amount of sand displaced towards the water by surface erosion. In addition, if such an approach were pursued, we would also recommend that the subgrade is excavated to a lower level and the overall depth of sand increased. It should be noted that such a regrading would require a cut of 1 to 2 feet in the area of the existing trees to achieve the new finished grade and more if further excavation of the subgrade was pursued. This means that some or all of these trees within the sandy area of the beach would have to be removed.

With regard to controlling the beach drift resulting from the lake current, you have asked if the new dock will mitigate this action. The new pier, being of continuous and solid construction to beneath the water surface, will stop the current from the updrift side. In this manner, it will act as a groin, which is a rigid hydraulic structure built from the shore that interrupts water flow and limits the movement of sediment transport. The typical concern with groins is that from a functional standpoint, they trap sediment immediately updrift of the structure and accordingly eliminate deposits immediately downdrift, essentially starving that area. However, in this case the only sand source is the sandy beach which is completely located downdrift of the dock, so any sediment stopped by the dock should be negligible. Since the prevailing current will be stopped, it should at the least reduce the beach drift immediately east of the dock. The linear extent along the shore,

Jacobson

easterly from the dock to which this effect will be eliminated, would require more research and detailed analysis as to the direction of current, wave action and other factors, and therefore is beyond the scope of our review at this time.

Additionally, the extension of a floating dock from the end of the pier to the east should be of some additional benefit to mitigating the current and wave action contributing to beach drift. Because the dock would not necessarily be designed specifically as a wave attenuator however, we cannot be sure how much of an additional benefit this will provide without further research

In conclusion, we believe that the construction of a new concrete dock with continuous solid foundation in the location of the one that has been removed will provide an added benefit of reducing the beach drift and transmission of sand longitudinally along the shore in the area immediately east of the dock. However, to further minimize the overall beach erosion, we would recommend considering the measures we have also discussed, including lowering the grade of the beach and increasing the depth of sand.

Should you have any questions, please do not hesitate to contact me.

Sincerely,

NATHAN L. JACOBSON & ASSOCIATES, INC.

Thomas H. Fenton, P.E.

THF:thf

LAKE MANAGEMENT ADVISORY COMMITTEE

February 2, 2015

Ms. Carmen Vance
First Selectman
323 Route 87, Yeoman's Hall
Columbia, Connecticut 06237

On Thursday, January 29, 2015, Mr. Bud Meyers, from the Columbia Public Works Department, submitted a permit application seeking to replace the concrete dock that was removed from the Town Beach.

Lake Management Advisory Committee was requested to review the application and make a recommendation to the Board of Selectmen in time for their meeting on February 3, 2015. Over the past week-end, members of Lake Management were queried and the responses were mixed, with many questions raised about design, construction methods and environmental impact.

While Mr. Meyers has been most helpful in addressing questions, there is just insufficient time for a full review and discussion of the project, for Lake Management to make an informed recommendation to the Board of Selectmen.

Your consideration in this matter is appreciated.

Respectfully Submitted;
Mark T. Coleman
Mark T. Coleman
Chairman, LMAC

Town of Columbia
323 Jonathan Trumbull Highway, Columbia, CT 06237
Phone: (860) 228-0110 Fax: (860) 228-1952

Application for Constructing Structures on or over Columbia Lake

Date submitted: 1/29/15

Complete and return to the Board of Selectmen.

Property owner: Town of Columbia
Address: 323 Route 87
Property Location: 2 Beach Road
Daytime phone # 860 228-0110
Applicant if different from owner: Bud Meyers
Address: 323 Route 87
Daytime phone # 860 234-2195

Structure Information:

Proposal is for: ☐New ☒Replacement ☐Repair

Structure Type: ☒Dock ☐Seawall ☐Raft ☐Boat Cover

Application must include a sketch of the structure clearly indicating dimensions and placement of the structure in reference to the property, as well as information regarding materials to be used in construction/repair. Supporting information such as maps and pictures are also helpful and may help expedite the process.

Note: Applications made by persons other than the property owner must contain the written approval of the application by the owner. All fee-owners and owners of rights-of-way shall join in any application. Signature below indicates approval for the Board of Selectmen or authorized town personnel to visit property for the purpose of inspecting prior to and after construction.

Owner Signature: _____ Date: _____

Applicant Signature: Bud [signature] Date: 1-29-15

Special note: Permission by the Board of Selectmen to construct a structure on or above the Town owned lake bottom shall not relieve the applicant from obtaining other required approvals, nor shall Selectmen approval indicate eventual approval by other officials.

Approved: _____ Date: _____
First Selectman

Revised: 4/1/97, 12/01, 09/03, 10/03

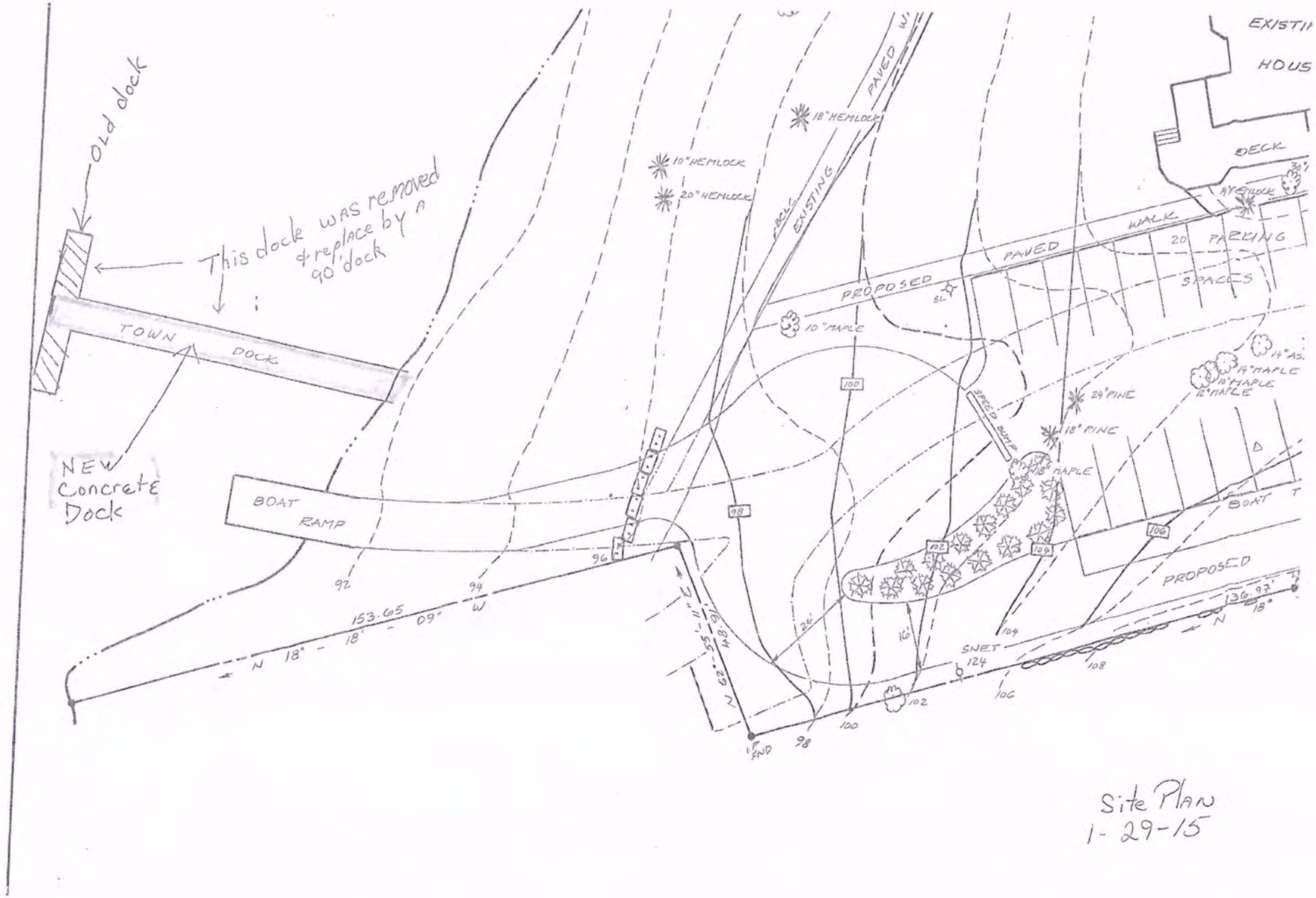

Site Plan
1-29-15

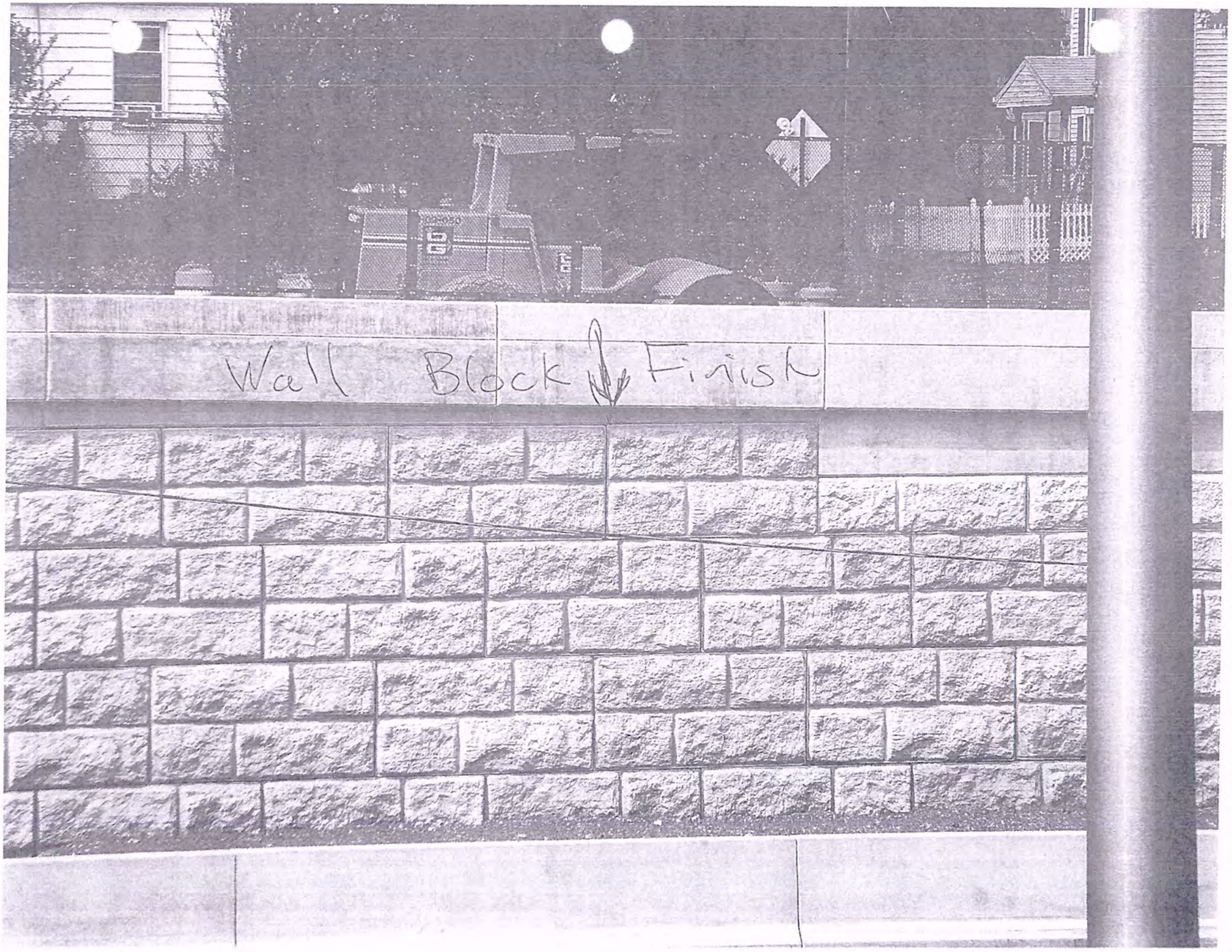
Wall Block Finish

DOUBLEWAL
RETAINING WALL SYSTEM

JOB NO. 14070 COLUMBIA PIER
SKETCH NO. 1 8-5-14

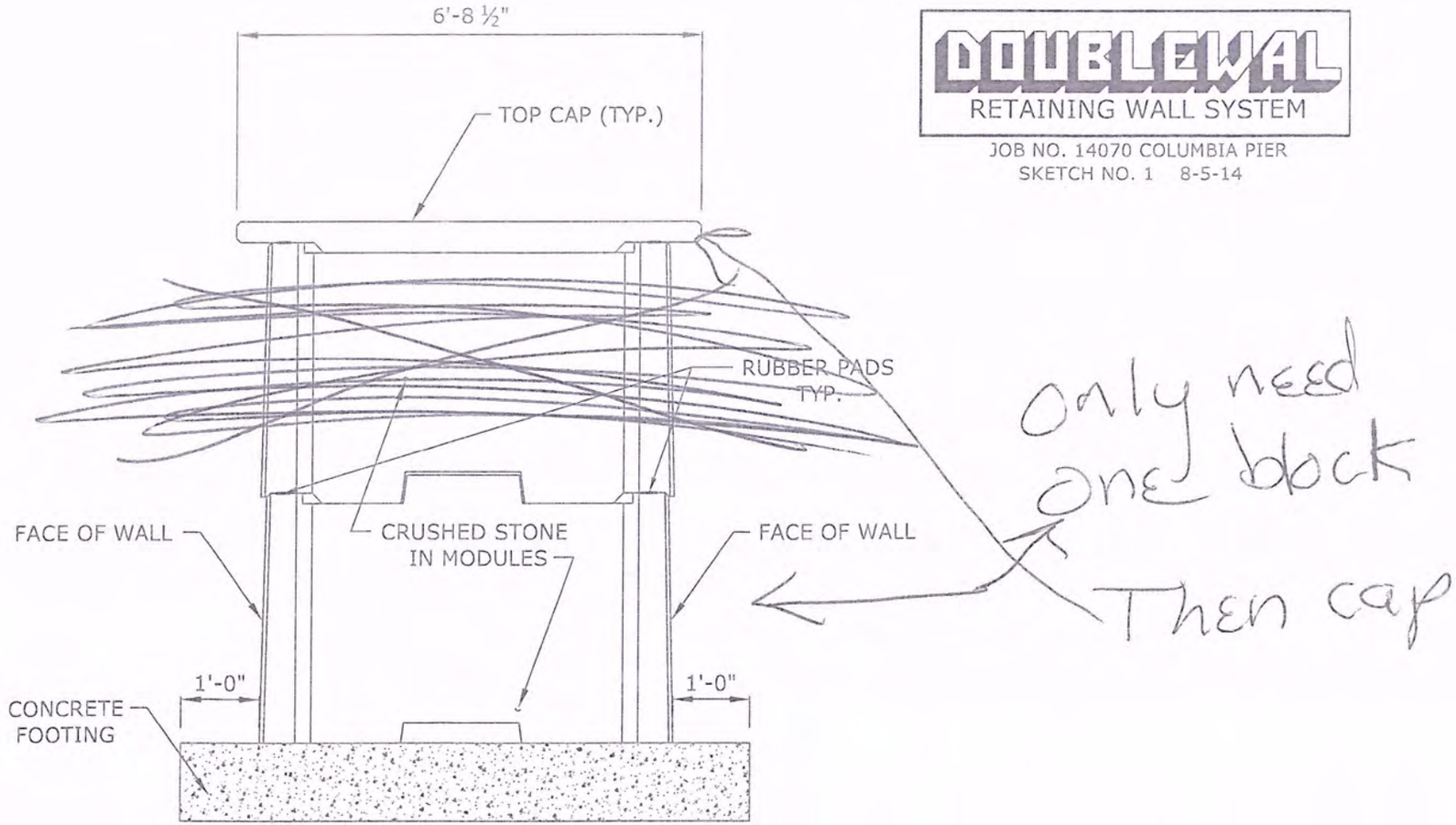

TYPICAL SECTION
N.T.S.

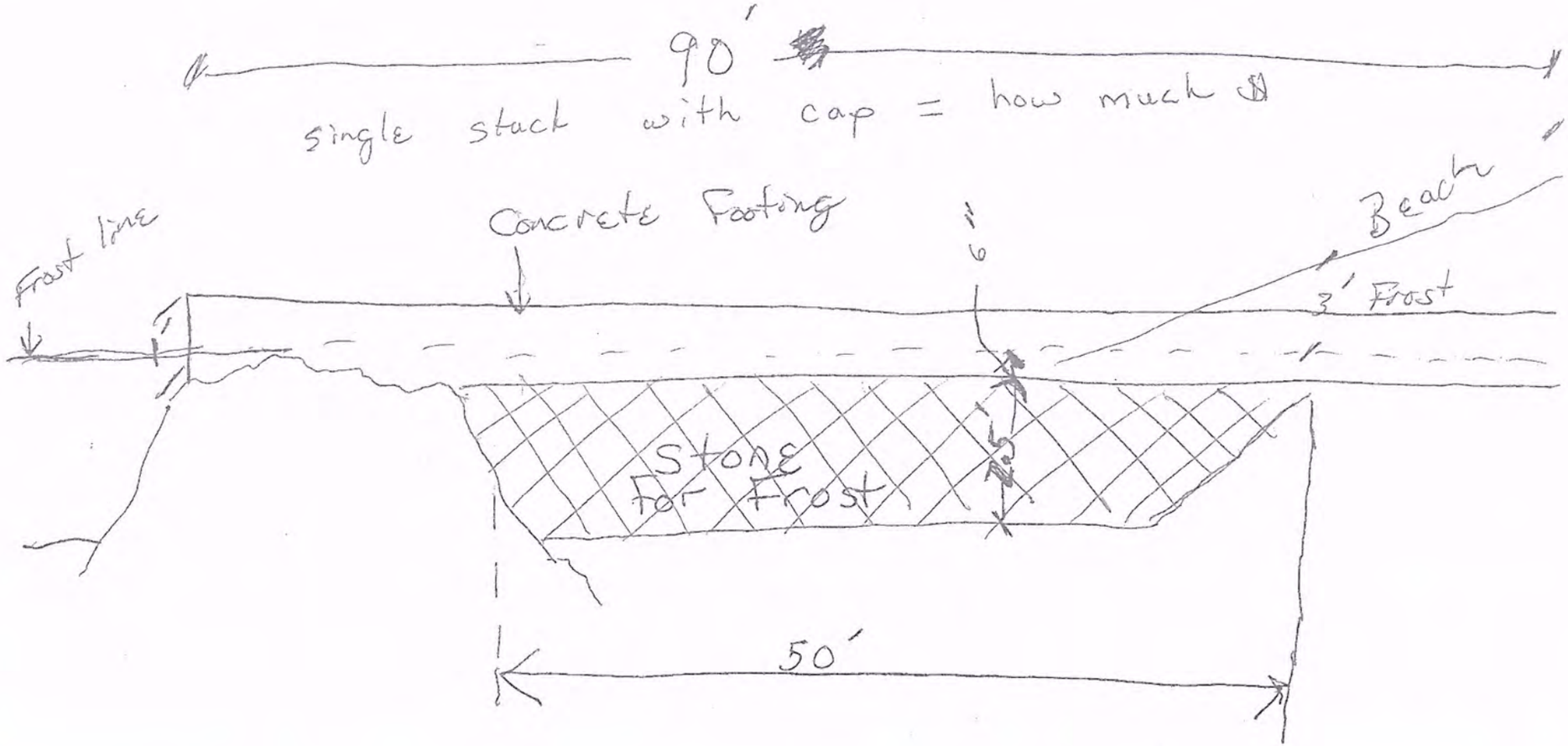

Can we use stone for frost area verses stepping the concrete down?

Interim Town Administrator Report (BOS) – Feb 3, 2015

- **Applications for TA job**
  - 24 applications received. interview date for Feb 18 for up to 6 candidates
- **Budget**
  - Completed for your review. Sent via email last Friday
- **Beach Dock**
  - Bud has been working on and we do have some numbers
- **Fire marshal job description**
  - I have revised and will present at future BOS meeting
- **Open space grant**
  - Still waiting for owner to complete their appraisal. Deadline (march 1) is date for DEEP Open Space Grant Application
- **Bridges with Lebanon**
  - No update
- **Hop River Bridge with Coventry**
  - Waiting for STEAP Grant approval. Coventry has one submitted as well for HR.
- **Baker Hill Bridge**
  - Formalizing Bid documents now with our Engineering firm
- **Dam Project**
  - Updating Dam Emergency Operations Plan. Reviewed by Lake Management
- **School Roof Project**
  - Equipment has been updated. Still waiting for "balancing of system" to be complete
- **Library Project**
  - Bob Powell continues to meet with Library. We are close to agreeing on a new design for renovation
- **Town Clerk Software**
  - Working on final details with vendor
- **Nutmeg Network Grant**
  - Still waiting for 3rd quote for fiber/copper cabling from a vendor
- **Mark away from Feb 3-11**
  - I will be checking emails several times each day and will also be available by cell